Halsey Taylor®
Satisfying Thirsts Since 1912

Large Remote Chiller

MODEL SJ30-Q

Certified to **NSF/ANSI 61.**

CABINET
Manufactured of rust-resistant heavy gauge galvanized steel. Removable service panels.

PLUMBING CONNECTIONS
3⁄8" O.D. stainless steel tubing inlet and outlet.

ELECTRICAL CONNECTION
7⁄8" diameter opening for conduit connection.

COOLING UNIT
Combination tube-tank type. Tube portion is continuous coil of copper tubing. Tank is stainless steel.

TEMPERATURE CONTROL
Positive sensing thermostat for controlling temperature of evaporator/chiller storage water. Factory set for 40°F water. Adjustable to 50°.

FAN MOTOR
Unit bearing self-lubricating type for maintenance-free longer life.

CONDENSER
Copper/aluminum construction with aluminum fins.

DRAIN PLUG
Provided with drain plug with O-ring seal.

REFRIGERATION SYSTEM
Hermetically sealed, positive start compressor with lifetime lubrication and built-in overload protection, efficient capillary sizing, large capacity dryer-strainer, and self-lubricated fan cools copper/aluminum condenser. System uses R134A refrigerant. Test pressures, highside 375 psig., lowside 150 psig. Protected by Halsey Taylor's Limited 5 Year Warranty.

VENTILATION
It is important to insure proper ventilation. A minimum of 6 inches (152mm) to the front must be maintained, and 6 inches (152mm) to the rear of the unit.

NOTE: Continued product improvement makes specifications subject to change without notice.See Halsey Taylor website for most current spec sheet.

ELECTRICAL
Furnished with 6" leads enclosed in junction box for direct connection to standard 115 volt, 60 Hz, single phase.

SUGGESTED SPECIFICATIONS
Shall deliver 29.5 GPH of 50°F water at 90°F ambient and 80°F inlet water. Designed for use where large quantity of chilled water is required. Compressor shall be hermetically sealed. Manufacturer shall certify unit to be lead free as defined by the Safe Drinking Water Act. System controlled by adjustable thermostat. Complies with ARI Standard 1010.

SJ30 can serve 3 fountains

Locate chiller within 15 feet of fountain for optimum performance.

JOB NAME: _____

_____

_____

ENGINEER/CONTRACTOR NAME:

_____

APPROVAL: _____

DATE: _____

LARGE REMOTE CHILLER

Model No.	GPH Capacity Cooled to 50° F* Ambient Air Temp 70°F	80°F	90°F†	100°F	Base Rate Cap.	F.L. Amps	Shipping Weight lb.	Rated Watt Usage
SJ30-Q	33.9	31.9	29.5	27.1	29.5	14.0	118	1290

* With projector service at 1ft. from outlet and supply water at 80° F

† UL listed and complies with ARI Standard 1010

NOTE: A service supply stop (not included) should be installed at the cooler inlet line.

halseytaylor.com
HALSEY TAYLOR, 2222 CAMDEN COURT, OAK BROOK, ILLINOIS 60523

SJ30-Q

Large Remote Chiller

(CONTINUED)

INSTALLATION
A minimum clearance of 6" in front and back of unit is required to insure proper ventilation.

OPERATING PRESSURES:
Supply water - 105 psi maximum

Dimensions
33¼"W x 13¾"D x 16"H

Shipping weight: 125 lbs.

LEFT SIDE VIEW

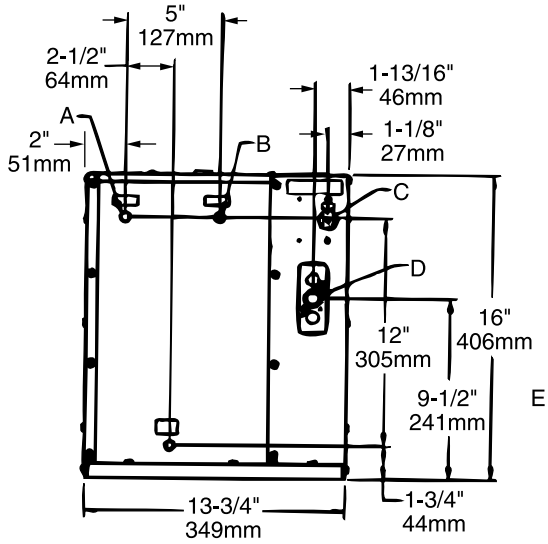

FRONT VIEW

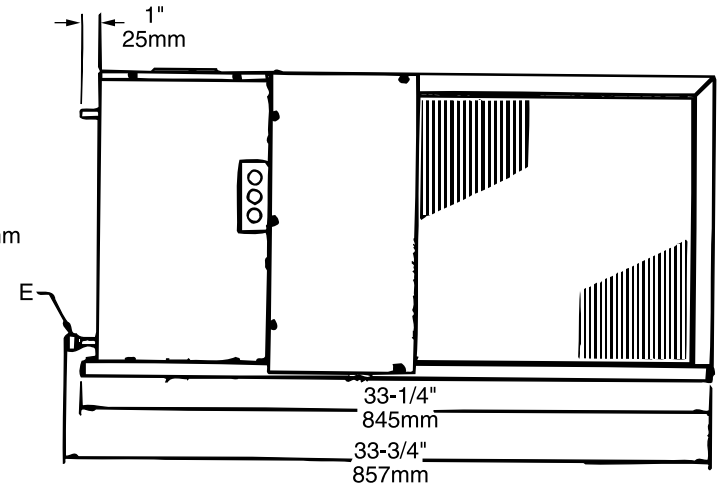

LEGEND:
A = 3/8" O.D. TUBE WATER INLET
B = 3/8" O.D. TUBE WATER OUTLET
C = TEMPERATURE ADJUSTMENT
D = ELECTRICAL
E = 3/8" O.D. TUBE TANK DRAIN

NOTE: A service supply stop (not included) should be installed at the water inlet line.

Halsey Taylor®