Halsey Taylor

SPECIFICATIONS

OBS - REFER TO EDFPB117C

Model OVL-II SEBP (IN-WALL CARR)

PRODUCT SPECIFICATIONS

OBS - REFER TO EDFPB117C. Furnished with Double Bubbler ™. Mechanical Front Bubbler Button activation. Product shall be Wall Mount (On Wall), for Indoor applications, serving 2 station(s). Unit shall be lead-free design which is certified to NSF/ANSI 61 & 372 (lead free) and meets Federal and State low-lead requirements.

Order ID:	7434009083
Finish:	Stainless Steel
Power:	No Electrical Required
Bubbler Style:	Double Bubbler ™
Activation by:	Mechanical Front Bubbler Button
Mounting Type:	Wall Mount (On Wall)
Chilling Capacity:	Non-refrigerated
Dimensions (L x W x H):	38-1/2" x 19" x 21-15/16"
Approx. Shipping Weight:	55 lbs.
Installation Location:	Indoor
No. of Stations Served:	2

Special Note: Requires In-Wall Carrier MPW200 (sold separately)

- Mechanically-Activated bubbler continues to supply water in event of service disruptions.
- Exclusive Double Bubbler which projects two separate streams that converge to form a fuller, more satisfying drink.

Included with Product: Fountain

Ships in one box.

AMERICAN PRIDE. A LIFETIME TRADITION.

Like your family, the Elkay family has values and traditions that endure. For almost a century, Elkay has been a family-owned and operated company, providing thousands of jobs that support our families and communities.

PRODUCT COMPLIANCE

ADA & ICC A117.1

ASME A112.19.3/CSA B45.4

Buy American Act

NSF/ANSI 61 & 372 (lead free)

Complies with ADA & ICC A117.1 accessibility requirements when installed according to the requirements outlined in these standards. Installation may require additional components and/or construction features to be fully compliant. Consult the local Authority Having Jurisdiction if necessary.

Installation Instructions (PDF) - 97638C

Water Systems are warranted for 12 months from date of installation. **Warranty pertains to drinking water applications only. Non-drinking water applications are not covered under warranty.**

Warranty (PDF)

PART:_____QTY: _____

PROJECT:_____

CONTACT:_____

DATE:_____

NOTES:_____

APPROVAL:_____

Optional Accessories

In keeping with our policy of continuing product improvement, Halsey Taylor reserves the right to change product specifications without notice. Please visit Halseytaylor.com for the most current version of Halsey Taylor product specification sheets. This specification describes a Halsey Taylor product with design, quality, and functional benefits to the user. When making a comparison of other producers' offerings, be certain these features are not overlooked.

HWF172	Halsey Taylor WaterSentry VII Filter Kit (Coolers + Fountains) Spec Sheet (PDF)	
MPW200	In-wall Mounting Plate for Bi-level On-wall Non-refrigerated Fountains Spec Sheet (PDF)	
HTOVLAPR	Halsey Taylor Cane Apron for OVL-II Models (Gray) Spec Sheet (PDF)	
ACCESS12X38-5	Stainless Steel Access Panel for Bi-Level Architectural Fountains Spec Sheet (PDF)	

In keeping with our policy of continuing product improvement, Halsey Taylor reserves the right to change product specifications without notice. Please visit Halseytaylor.com for the most current version of Halsey Taylor product specification sheets. This specification describes a Halsey Taylor product with design, quality, and functional benefits to the user. When making a comparison of other producers' offerings, be certain these features are not overlooked.

INSTALLER NOTE
This drinking fountain is furnished with a bubbler and valve including all connecting fittings which are manufactured of completely lead free material. Shut off valve (not furnished) to accept 3/8" O.D. unplated copper tube.

These products are designed to operate on 20 psi to 105 psi supply line pressure. Simultaneous operation of both bubblers on a bi-level unit may not be possible depending on water supply pressure. If simultaneous operation is desired, please ensure a minimum of 50 psi supply.

OPERATION OF QUICK CONNECT FITTINGS

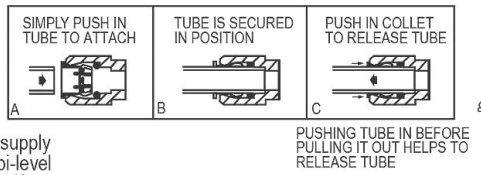

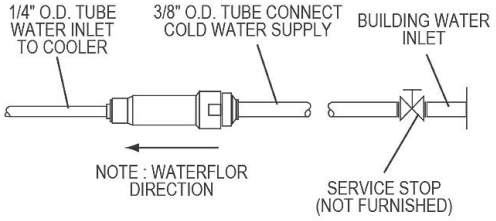

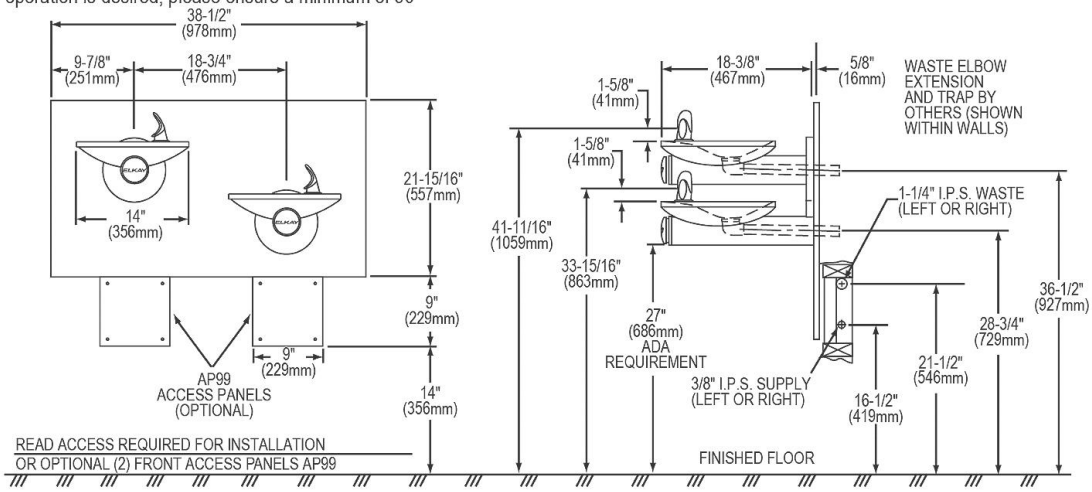

In keeping with our policy of continuing product improvement, Halsey Taylor reserves the right to change product specifications without notice. Please visit Halseytaylor.com for the most current version of Halsey Taylor product specification sheets. This specification describes a Halsey Taylor product with design, quality, and functional benefits to the user. When making a comparison of other producers' offerings, be certain these features are not overlooked.

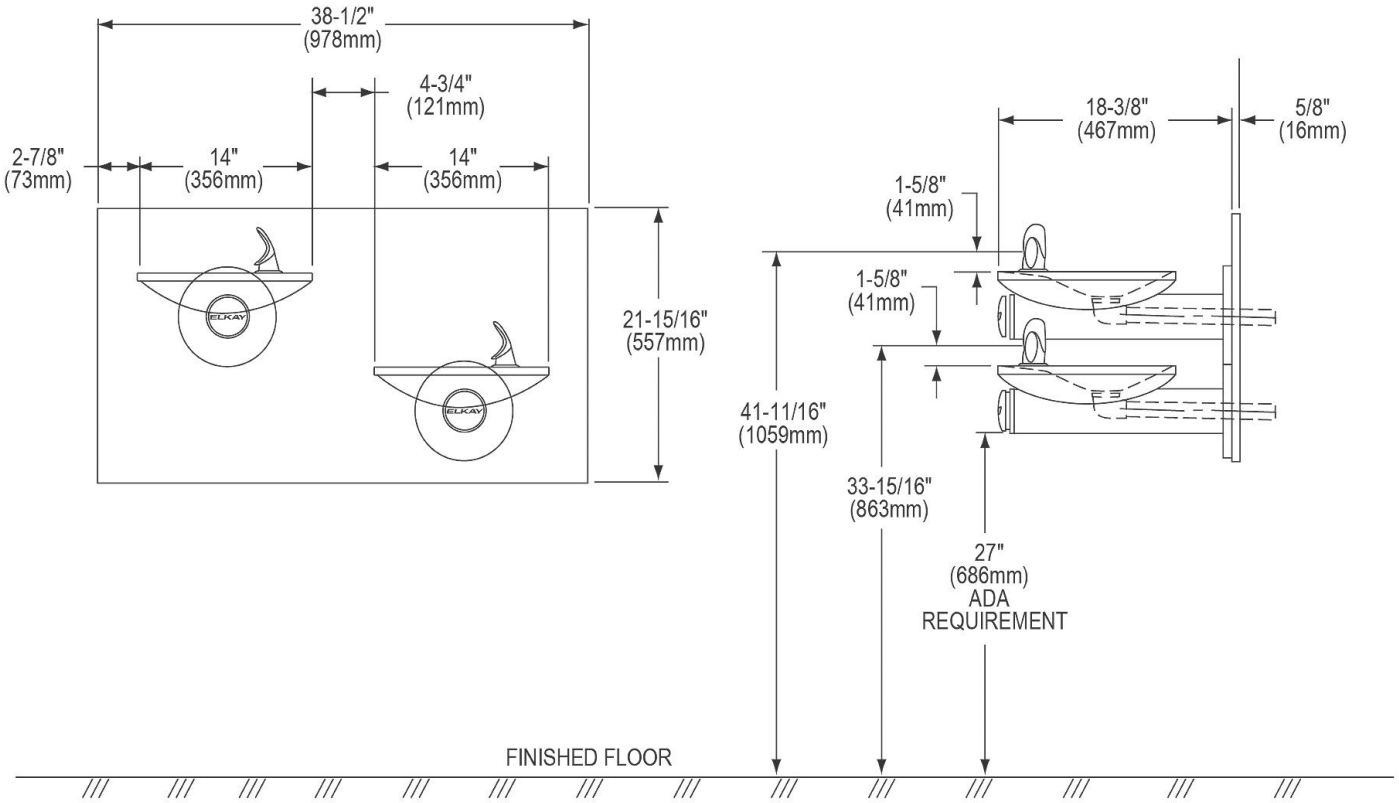

FRONT VIEW

SIDE VIEW

In keeping with our policy of continuing product improvement, Halsey Taylor reserves the right to change product specifications without notice. Please visit Halseytaylor.com for the most current version of Halsey Taylor product specification sheets. This specification describes a Halsey Taylor product with design, quality, and functional benefits to the user. When making a comparison of other producers' offerings, be certain these features are not overlooked.