Halsey Taylor®
Satisfying Thirsts Since 1912

HydroBoost® In-Wall Bottle Filler with Model HTHB-HRFSER

HRF Fountain With Bottle Filler

Rated for Indoor Use Only

MODEL: HTHB-HRFSER

GENERAL
In-wall, recessed bottle filling station paired with the bi-level Contour™ refrigerated fountain.

HYDROBOOST® BOTTLE FILLING STATION
In-wall, recessed design with solid lower panel. Quick fill rate is 1.1 gallons per minute. Includes laminar flow to provide a clean fill with minimal splash and easy maintenance. Equipped with automatic 20-second shut-off timer. User interface design makes touchless operation intuitive. Key plastic components are integrated with silver ion anti-microbial protection to inhibit growth of mold and mildew.

Designed with hinged top and bottom stainless steel panels for easy access and service.

GREEN COUNTER™
Visually displays count of plastic bottles saved from waste. (Based on 20 oz. bottles.)

FOUNTAIN
Features contoured basin and softly rounded corners and edges.

HALSEY TAYLOR DOUBLE BUBBLER™
Exclusive one-piece, chrome-plated two-stream mound-building bubbler with non-removable anti-squirt feature and integral hood insures a satisfying drink of water.

AUTOMATIC STREAM HEIGHT REGULATOR
Self-closing assembly is located inside unit to prevent tampering. Unit resists corrosion and liming. A constant stream height is automatically maintained under line pressures that vary from 20 to 105 psi.

PUSHBUTTON ACTUATION
Self-closing, vandal-resistant pushbutton does not require grasping or twisting.

MOUNTING FRAME
Manufactured from corrosion resistant, galvanized steel. Open construction designed for ease of installation. Mounting frames can be shipped in advance for rough-in installation.

Stainless Steel Finish Only

SUGGESTED SPECIFICATIONS
Model HTHB-HRFSER provides 8.0 gph of 50°F water at 90°F ambient and 80°F inlet water. Bottle filler shall be recessed design and include electronic sensor activation with 20-second automatic water shut-off. Shall provide 1.1 gpm flow rate with laminar flow to prevent splashing. Shall include anti-microbial protected plastic components to prevent mold and mildew. Shall include visual display of plastic bottles saved from waste. Fountain shall have rounded corners and contoured basin, designed with easy to operate pushbutton. Shall include SJ8 water chiller. Shall meet ADA guidelines for visual and motion disabilities, when properly installed. Shall be lead-free design which meets the Safe Drinking Water Act and is certified to NSF/ANSI 61 and 372, UL 399 and CAN/CSA 22.2 No. 120.

Each HTHBWF-HRFSER is shipped in 6 cartons including:

HYDROBOOST Station with Louvered Lower Panel
HRF-SER Fountain
Mounting Frame (2)
Cooling Unit – SJ8 (2)

CAPACITIES CHART

Model	Voltage / Hertz	Chilling** Capacity	F.L. Amps	*Rated Watts	Approx. Ship Wt.	UL399 and CAN/CSA 22.2 No. 120 Certified	ADA COMPLIANT	NSF/ANSI 61 and 372 Certified
HTHB-HRFSER	115V / 60Hz	8.0 GPH	5.0	740	164 lbs.	•	•	•

**Based on 370 watts per chiller.*
Note: Continued product improvement makes specification subject to change without notice. See Halsey Taylor website for most current spec Sheet.

halseytaylor.com
HALSEY TAYLOR, 2222 Camden Court, Oak Brook, IL 60523

Model HTHB-HRFSER
HydroBoost® In-Wall Bottle Filler

Halsey Taylor®
Satisfying Thirsts Since 1912

Rated for Indoor Use Only

MOUNTING INSTRUCTIONS:
Refer to diagrams for rough-in of plumbing and electrical sources. The support frame is to be installed first. Hang upper Bottle Filler panel to hanger on frame. Water service lines, waste lines and electrical are assembled as required. The bottom panel is attached last, after a final check for leaks and correct functions of Bottle Filler. (For details see the installation instructions.)

NOTE: A service stop (not included) must be installed at the fountain inlet line.
NOTE: P-Trap (not supplied) to be installed per local building code.
NOTE: For wall support required locations see installation instructions provided with panel and fountains.

CAUTION - Bottle Filler must be securely bolted to wall.

OPERATING PRESSURES:
Supply water - 105 psi maximum

Minimum 40 psi supply line pressure required in special circumstances where both Bubbler and Hydroboost are in use simultaneously to ensure adequate stream height.

ELECTRICAL
Hydroboost® station equipped with electric cord and three-prong molded rubber plug for use with 15-amp minimum receptacle. For the cooling unit, a junction box for a (3) wire, 10 amp branch circuit is provided. Rated at 115 volt, 60 Hz, single phase.

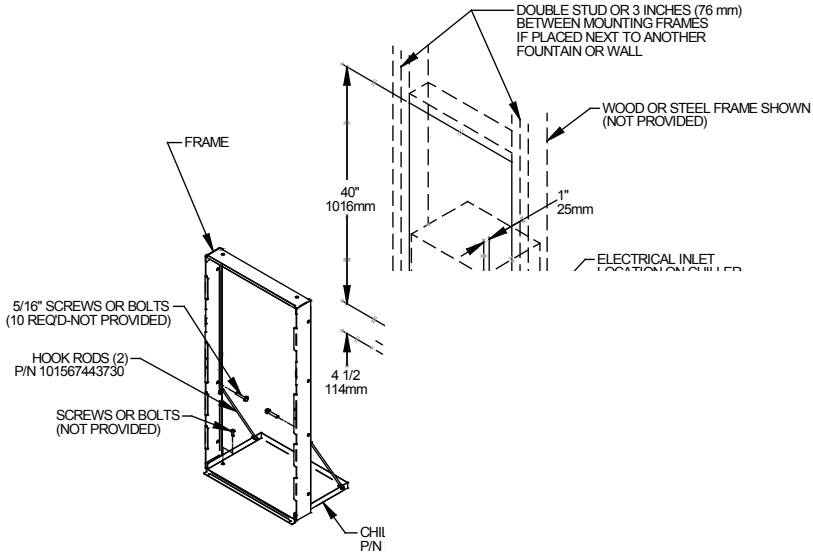

TOP & SIDE VIEWS

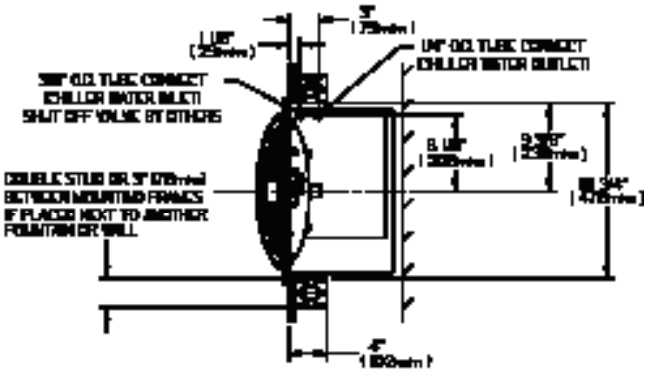

FRONT VIEW

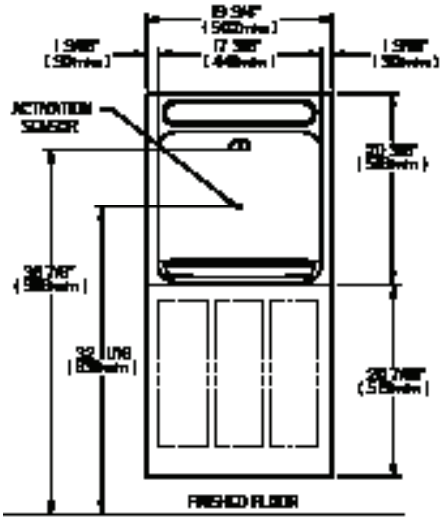

WALL LAYOUT

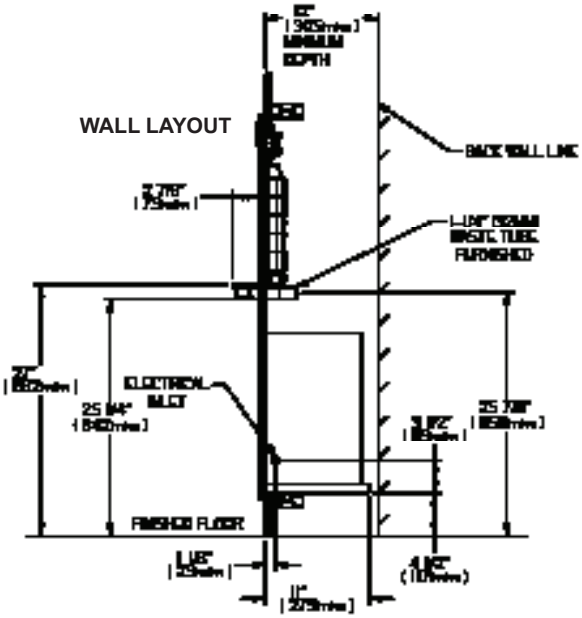

Job Name: _____

Date: _____ Qty. _____

Contact Info (Name, Phone, Email): _____

Approval: _____

Halsey Taylor®

Printed in the U.S.A.

Model HTHB-HRFSER
Filtered Contour™ Fountain

Halsey Taylor®
Satisfying Thirsts Since 1912

Rated for Indoor Use Only

WALL OPENING
IMPORTANT: It is necessary to create a wall opening 37 1/2" W x 37 3/4" H and 4 1/2" above the floor line.

MOUNTING INSTRUCTIONS
Refer to rough-in for location of plumbing and electrical sources. The support frame is to be installed first. The shelf for the water chiller should be assembled to the wall frame, and then place chiller into position. Hang upper fountain panel to hanger on frame. Fountains are to be attached to panel and wall frame. Water service lines, waste lines and electrical are assembled as required. The bottom panel is attached last, after a final check for leaks and correct functions of fountains and chiller.
(For details see the installation instructions.)

Installation required trap to be install in wall. Trap and service stop not included.

OPERATING PRESSURES:
Supply water - 105 psi maximum

Minimum 40 psi supply line pressure required in special circumstances where both sides of bi-level are in use simultaneously to ensure adequate stream height. Use of water filter in sthis situation is not recommended.

ELECTRICAL DATA
Junction box for a (3) wire 10 AMP branch circuit. Standard 120 volt, 60 Hz, single phase.

TOP & SIDE VIEWS

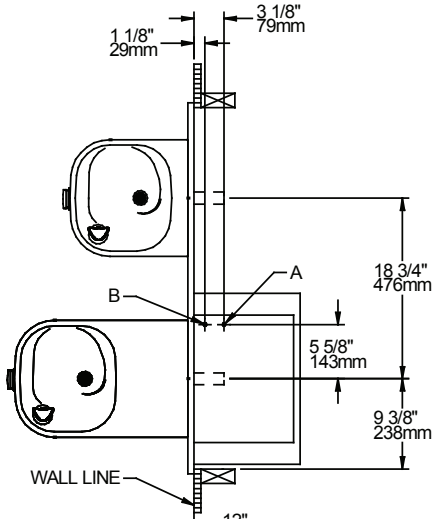

FRONT VIEW

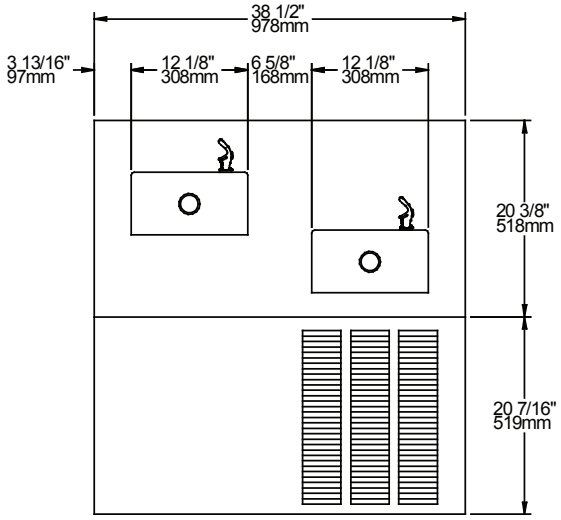

WALL LAYOUT

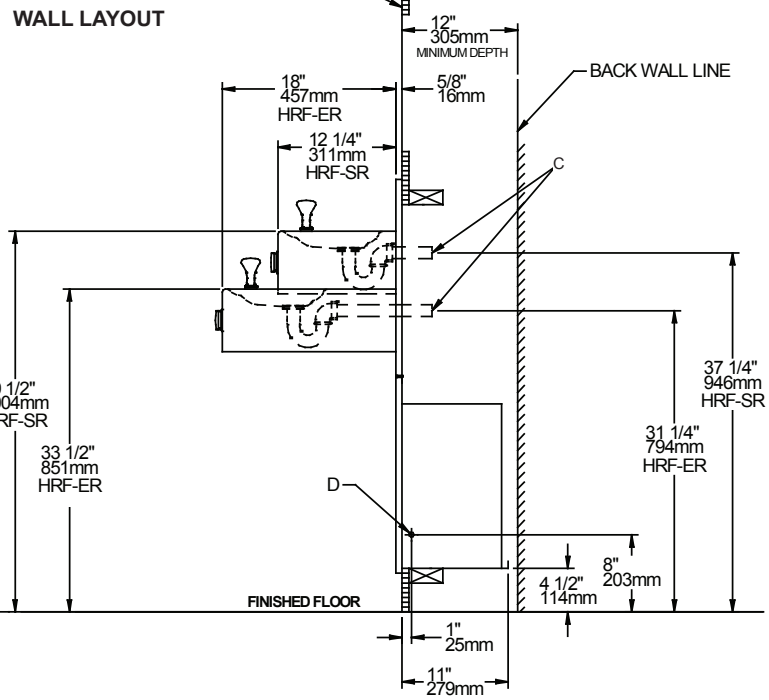

LEGEND:
A = 1/4" O.D. TUBE CONNECT (CHILLER WATER OUTLET)
B = 3/8" O.D. TUBE CONNECT (CHILLER WATER INLET) SHUT OFF VALVE BY OTHERS
C = 1-1/4" WASTE TUBE (ELBOW & TRAP NOT PROVIDED)
D = ELECTRICAL INLET

Halsey Taylor®

Printed in the U.S.A.

Model HTHB-HRFSER
Filtered Contour™ Fountain

Halsey Taylor®
Satisfying Thirsts Since 1912

1. **Cut a rectangular wall opening** 37-1/2" (953mm) W x 37-3/4" (959mm) H and 4-1/2" (114mm) above the floor line. The dimensions are required to obtain proper rim and bubbler heights for compliance with ANSI standard A117.1.

2. **Reinforce the wall opening** on all sides to adequately support the water fountain. This reinforcement must support up to 150 lbs. static load and provide a means for securing the frame assembly in place.

   NOTE: Building construction must allow for adequate air flow on both sides, top and back of chiller. A minimum of 4" (102mm) on both sides and top is required. See Chiller installation for additional instructions.

3. **Install plumbing and electrical rough-ins.** A junction box for a (3) wire, 10 amp branch circuit is provided on the inside of the chiller. (Standard 120 Volts, 60 Hz, and single phase.)
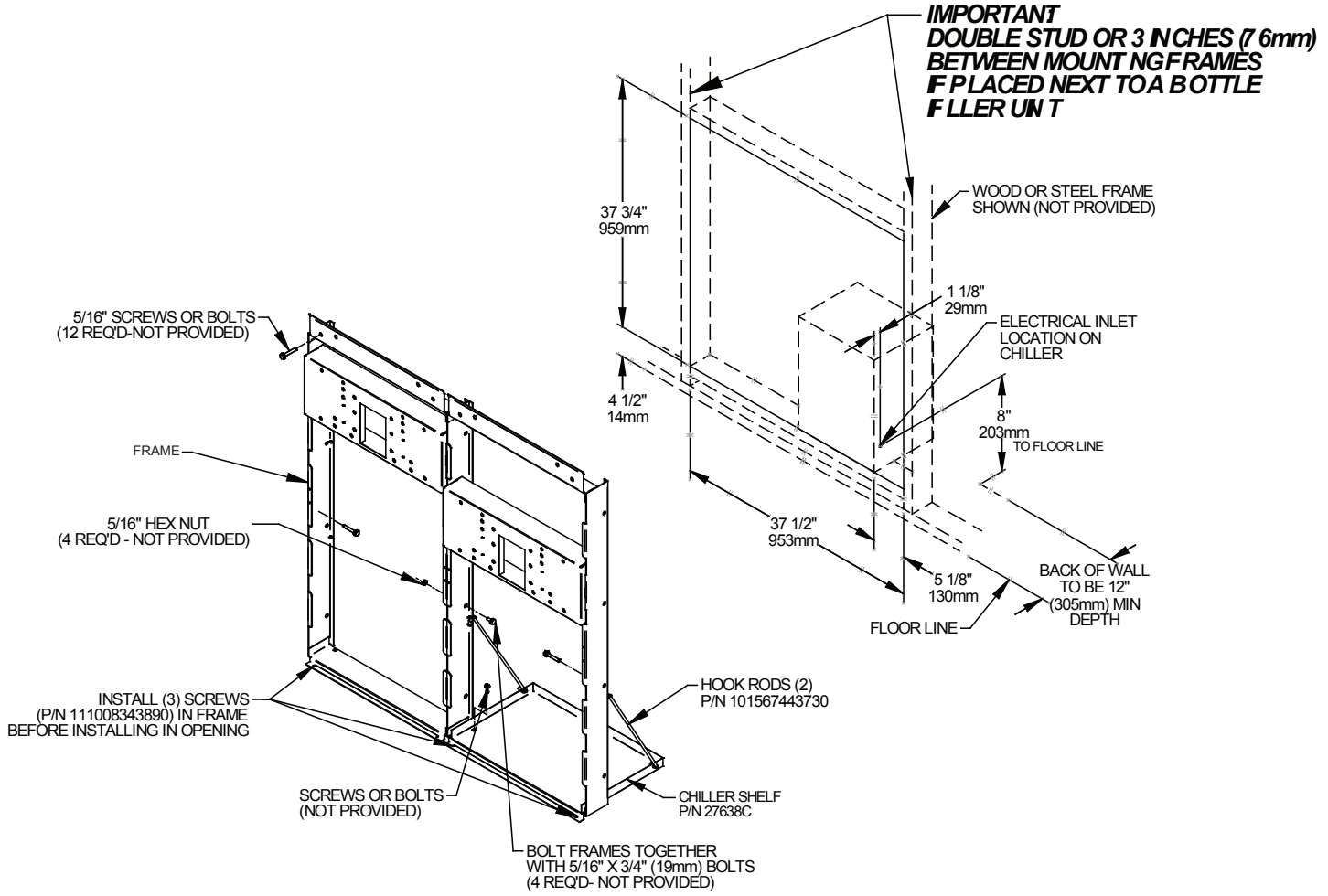
4. **Remove frames and related hardware** from packaging. Release the two shelf rods by cutting cable ties. Attach the two frames together through the upright supports with (4) 5/16" x 3/4" (19mm) long bolts and nuts (provided). Tighten securely.