Halsey Taylor®
Satisfying Thirsts Since 1912

Endura II™ Outdoor Tubular Bottle Filling Station

MODEL 4405BFFRK

Freeze-Resistant Wall Mount Fountain

Model 4405BFFRK is shown.

GENERAL
Endura II™ Steel Outdoor Freeze-Resistant Wall Mount Fountain with Bottle Filling Station with rounded corner design, heavy-duty steel with textured powder-coat finish and E-Coat immersion for year-round beauty with minimum maintenance. The E-Coat immersion process coats the inside and outside for the ultimate in corrosion protection.

BOTTLE FILLER
Provides a quick fill at 1 gallon per minute. Laminar flow provides a clean fill with minimal splash and easy maintenance.

FREEZE-RESISTANT VALVE SYSTEM
Freeze-Resistant system features box that installs behind non-freezing wall for housing water connection from the stop to the strainer.

PUSHBUTTON ACTUATION MECHANISM
Self-closing, vandal-resistant pushbutton does not require grasping or twisting.

WATER INLET & DRAIN OUTLET
Inlet: 3/8" O.D. Tubing
Outlet: 1-1/4" tube outlet for 1-1/4" slip joint connection

ACCESS PANELS
Heavy-gauge steel with vandal-resistant screws. Provides access for easy hook-up of all plumbing connections.

SUGGESTED SPECIFICATIONS
Unit shall include powder-coated finish with vandal-resistant pushbutton actuation. Bottle Filler shall include a laminar flow for minimal splash and provide 1 gallon per minute fill rate. Shall include Freeze-Resistant valve system. Fountain shall comply with ANSI 117:1 and ADA for visual and motion disabilities. The manufacturer shall certify the unit to meet the requirements of NSF/ANSI 61, and the Safe Drinking Water Act.

Model	Color Option	ADA Compliant	NSF/ANSI 61 Certified
4405BFFRK*	(Refer to Finish Color Options)	•	•

* Select color option to complete model number. Example: 4405BFFRK**EVG**

Now Available in 12 Colors!

FINISH COLOR OPTIONS – ***Choose color option to complete your model number, add as suffix example:*** *4405BFFRK**EVG***

Matte finish: ☐ Evergreen = **EVG**

Gloss finish:

- ☐ Beige = **BGE**
- ☐ Black = **BLK**
- ☐ Blue = **BLU**
- ☐ Brown = **BRN**
- ☐ Gray = **GRY**
- ☐ Orange = **ORN**
- ☐ Purple = **PUR**
- ☐ Red = **RED**
- ☐ Terracotta = **TER**
- ☐ White = **WHT**
- ☐ Yellow = **YLW**

Each 4405 FR consists of 2 cartons of the following:

- Fountain
- Freeze-Resistant Box - HTFRB1

Note: Continued product improvement makes specifications subject to change without notice. See Halsey Taylor website for most current spec sheet.

Endura II™ Outdoor Tubular Bottle Filling Station MODEL 4405BFFRK

OPERATING PRESSURES:
Supply water 20 – 105 psi maximum

TOP VIEW

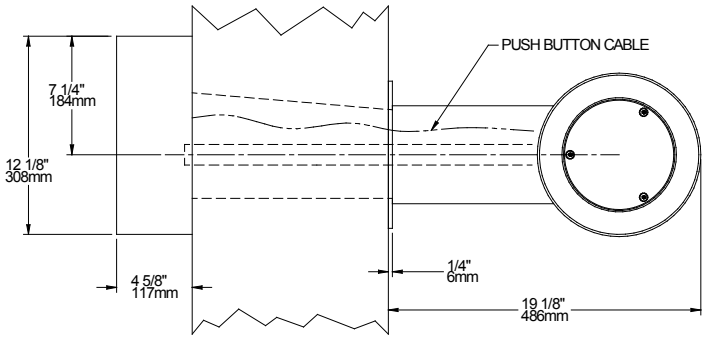

MOUNTING INSTRUCTIONS and PLUMBING CONNECTIONS
Refer to diagrams for plumbing rough-in. This fountain is to be mounted on a smooth, flat finished wall surface with adequate support.
Note: Wall mounting structure must be capable of supporting a 300 lb. load minimum on fountain. To secure unit, use 3/8" minimum fasteners (not provided). Water service line and waste line are to be assembled as required. Final check for leaks and correct functions of fountain should be made. (For details see the installation instructions.)

The Freeze-Resistant package must be mounted on an interior wall in a heated area. (See details in the installation instructions.)

Installation requires trap to be installed in wall. A service supply stop must be installed at the fountain inlet line. Trap and service stop not included.

Caution – Fountain must be securely bolted to wall.

NOTE: For wall support required locations see installation instructions provided with fountain.

MOUNTING BOLT & ACCESS HOLE LOCATION

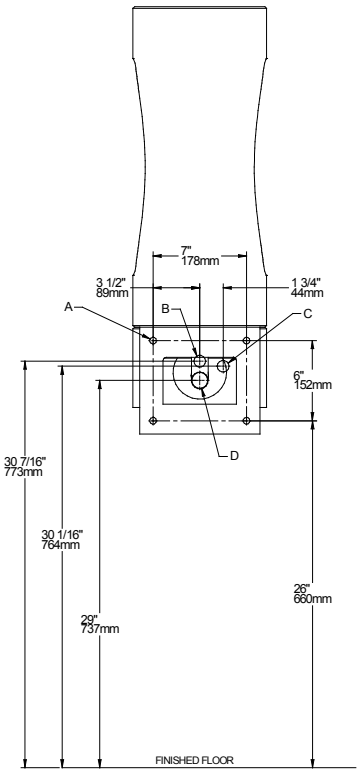

SIDE & FRONT VIEWS

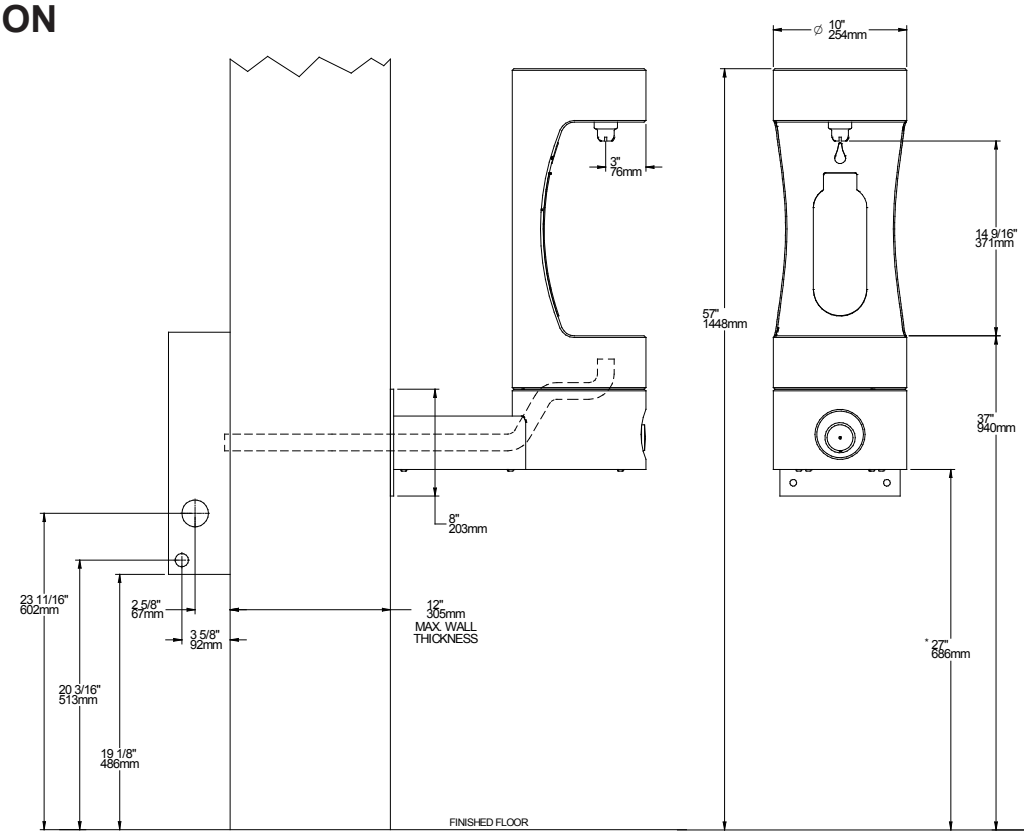

* ADA Requirement

LEGEND
A = MOUNTING SCREW OR BOLT LOCATIONS
B = 7/8" DIA. (22mm) HOLE FOR WATER SUPPLY TUBE
C = 7/8" DIA. (22mm) HOLE FOR OPERATING CABLE
D = 2" DIA. (51mm) HOLE FOR WASTE LINE

Halsey Taylor®

halseytaylor.com
HALSEY TAYLOR, 2222 Camden Court, Oak Brook, IL 60523
Printed in the U.S.A.